PROVIDED BY: PT. SINAR MAS SAKTI
TEL: (62 21) 6008088 - FAX: (62 21) 6293410 - EMAIL: sales@smsakti.com

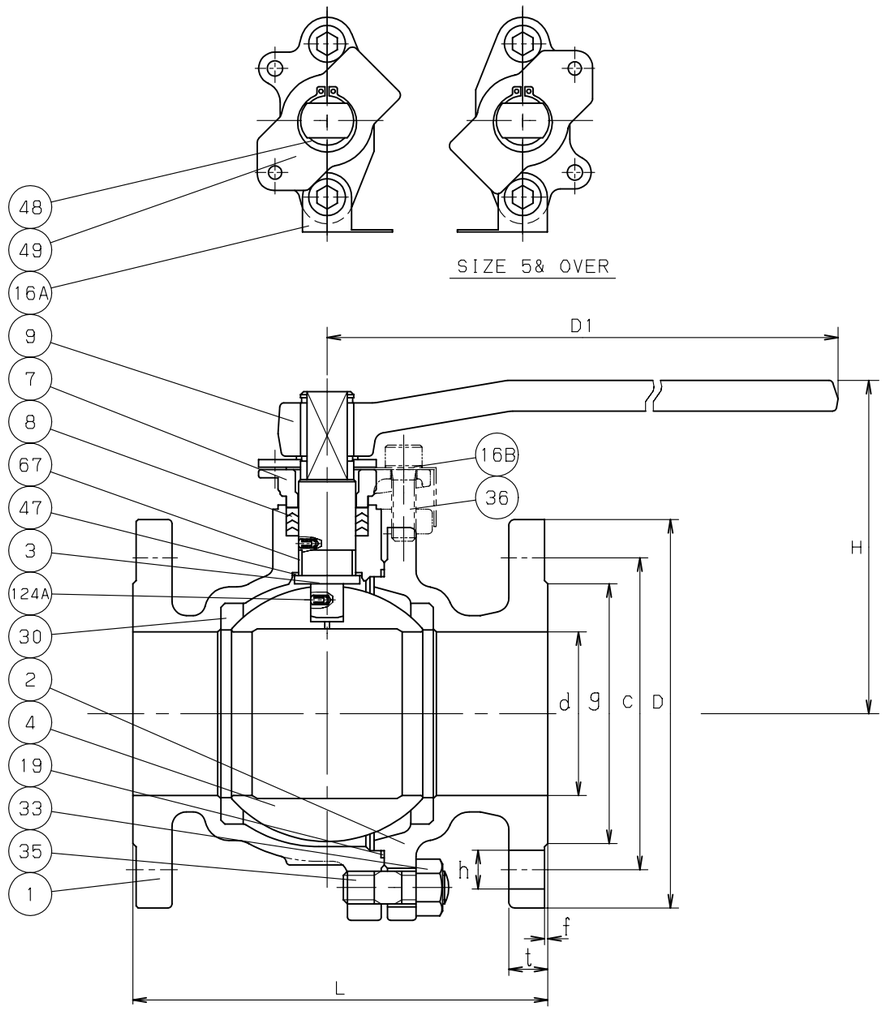

SIZE 5& OVER

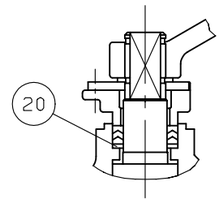

UP TO SIZE 1

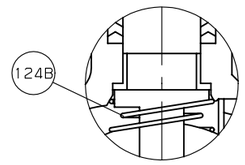

UP TO SIZE 2

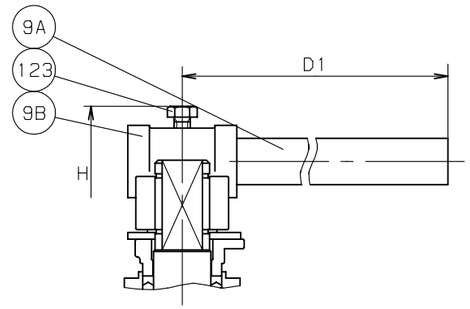

SIZE 6& OVER

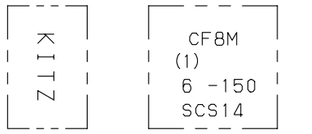

ONE SIDE THE OTHER SIDE
MARKING ON THE BODY

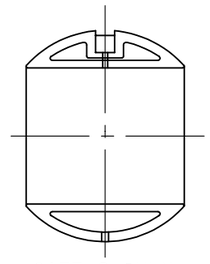

SIZE 8 ONLY

DIMENSIONS UNIT:mm

NOMINAL SIZE in.	NOMINAL SIZE mm	d	H	D1	L	END FLANGE D	BOLT HOLE C	BOLT HOLE NO.	BOLT HOLE h	BOLT SIZE	g	t	f	APPROX. MASS (kg)	
1/2	15	15	102	130	108	89	60.5	4	16	1/2	35	11.2	1.6	2.0	
3/4	20	20	105	130	117	98	70.0	4	16	1/2	43	11.2	1.6	2.3	
1	25	25	124	160	127	108	79.5	4	16	1/2	51	11.2	1.6	3.4	
1.1/2	40	40	115	230	165	127	98.5	4	16	1/2	73	14.3	1.6	6.4	
2	50	50	120	230	178	152	120.5	4	19	5/8	92	15.9	1.6	8.8	
2.1/2	65	65	155	400	190	178	139.5	4	19	5/8	105	17.5	1.6	16	
3	80	80	165	400	203	190	152.5	4	19	5/8	127	19.1	1.6	21	
4	100	100	200	460	229	229	190.5	8	19	5/8	157	23.9	1.6	34	
5	125	125	220	460	356	254	216.0	8	22	3/4	186	23.9	1.6	53	
6	150	150	295	1000	394	279	241.5	8	22	3/4	216	25.4	1.6	75	
8	200	200	355	1500	457	343	298.5	8	22	3/4	270	28.6	1.6	114	

NOTE (1) VALVE SIZE (inch) IDENTIFICATION.

NO	NAME OF PARTS	QTY	MATERIALS	SPECIFICATIONS
				ASTM SPEC.
1	BODY	1	STAINLESS STEEL	A351 Gr. CF8M
2	BODY CAP	1	STAINLESS STEEL	A351 Gr. CF8M
3	STEM	1	STAINLESS STEEL	A276 TYPE316
4	BALL	1	STAINLESS STEEL	A276 TYPE316 OR
				A351 Gr. CF8M
7	GLAND	1	STAINLESS STEEL	A351 Gr. CF8
8	GLAND PACKING	1S	PTFE	
9	HANDLE	1	DUCTILE IRON	
9A	HANDLE BAR	1	CARBON STEEL	
9B	HANDLE HEAD	1	DUCTILE IRON	
16A	NAME PLATE	1	ALUMINUM	
16B	WASHER	1	CARBON STEEL	
19	GASKET	1	PTFE	
20	PACKING WASHER	1	STAINLESS STEEL	A276 TYPE316
30	BALL SEAT	2	HYPATITE PTFE	
33	CAP NUT	1S	STAINLESS STEEL	A194 Gr.8
35	CAP BOLT	1S	STAINLESS STEEL	A193 Gr.B8
36	GLAND BOLT	1S	STAINLESS STEEL	.
47	THRUST WASHER	1	G/F PTFE	(SIZE 4& OVER)
48	SNAP RING	1	STAINLESS STEEL	A276 TYPE304
49	STOPPER	1	STAINLESS STEEL	A276 TYPE304
67	STEM BEARING	1	G/F PTFE	
123	HANDLE BOLT	1	CARBON STEEL	
124A	SPRING & PIN	1S	STAINLESS STEEL	A313 & A276 TYPE316
				(SIZE 2.1/2& OVER)
124B	SPRING	1	STAINLESS STEEL	A313 TYPE316
				(UP TO SIZE 2)
			1S=1 SET	

TEST PRESSURE		SHELL		SEAT	
	HYDROSTATIC	425 psi	kgf/cm²	psi	kgf/cm²
	AIR	psi	kgf/cm²	80 psi	kgf/cm²

STANDARD		
	FACE TO FACE OR END TO END	ASME B16.10 CLASS 150
	END CONNECTION	ASME B16.5 CLASS 150
	WALL THICKNESS	ASME B16.34 CLASS 150
FIGURE		150UTBM

CLASS 150 CAST STAINLESS STEEL BALL VALVES

ANTI-STATIC DEVICE, FULL BORE, FLANGED ENDS.

DATE APPD	AUG.22.'07	DRAWING NO	△		
APPD BY	Y. SATO	965-B10027	△		
CHKD BY	O. WATANABE		△		
DSGND BY	Y. YAMASHITA		△		
DRAWD BY	E. MATSUO	REV-02	MARK	DATE	BY

KITZ CORPORATION

KITZ